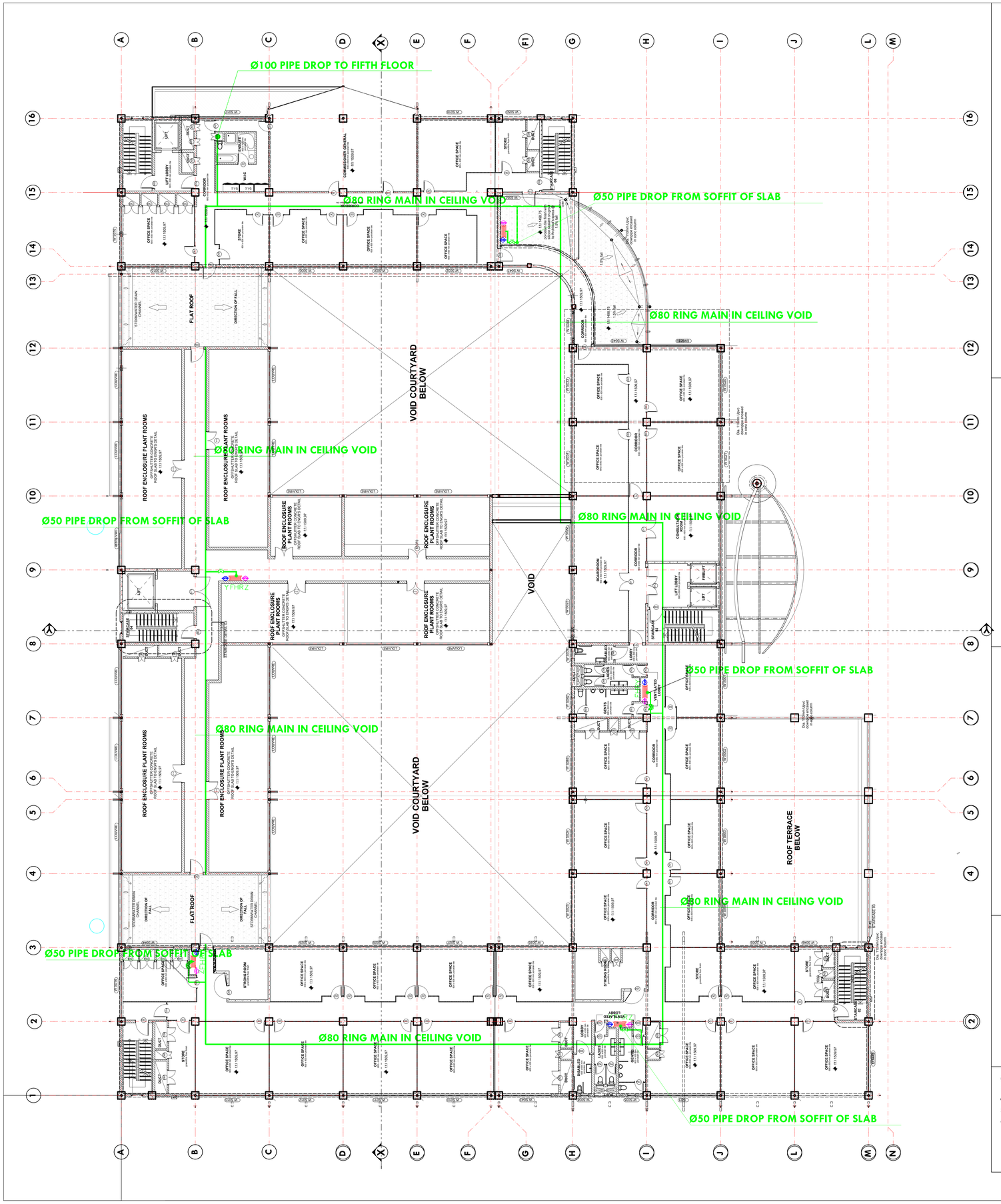

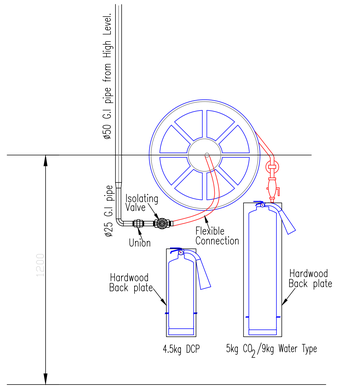

TYPICAL ELEVATION VIEW FOR FHR & FIRE EXITINGUISHERS
NTS

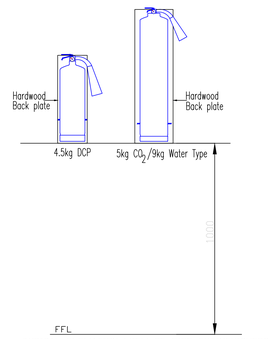

TYPICAL ELEVATION VIEW OF FIRE EXTINGUISHERS NOT COMBINED WITH FIRE HOSE REELs
NTS

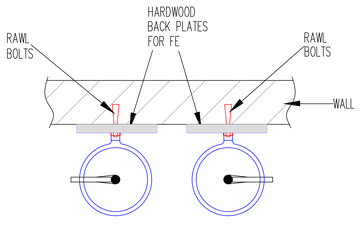

FIRE EXTINGUISHERS (FE) FIXING DETAIL
NTS

LEGEND

1) FHR ---- Fire Horse Reel
2) Z ---- 9Kg pressurised water fire extinguisher
3) Y ---- 9Kg dry powder fire extinguisher
4) X ---- 9Kg Co_2 fire extinguisher
——— . pipe ring main under roof slab

GENERAL NOTES

1)The fire hose reels shall fitted with a nozzle having an internal diameter of 4.8mm and the nozzle shal have a shut-off valve

2)fire extinguisher shall be hung on a bracket and the handle shall be a maximum distance of 1000mm AFFL

NOTES

INCLUDING ASSOCIATED DRAWINGS

DESCRIPTION

DATE	INITIAL	APPROVED BY

TABO.TECH
ELECTRICAL AND MECHANICAL CONSULTING ENGINEERS
TAFARA BUILDING, SUITE C5
60 G. SILUNDIKA/FIFTH STREET
HARARE
TELEPHONE : 793995
TEL/FAX : 793996
CELL : 011 705 360
091 369 662
Email : tabo-tech@comone.co.zw

MINISTRY

©COPYRIGHT TABO-TECH
THIS DRAWING IS A PROPERTY OF TABO-TECH AND SHALL NOT BE COPIED, TRACED, PHOTOGRAPHED OR REPRODUCED IN ANY MANNER WHATSOEVER WITHOUT PRIOR WRITTEN PERMISSION OF TABO-TECH CONSULTING ENGINEERS.

ARCHITECT:- MANYARA DESIGN ARCHITECTS
CLIENT:- ZIMBABWE REVENUE AUTHORITY

PROJECT:-
ZIMRA CORPERATE HEAD OFFICE

DRAWING DESCRIPTION:-
SIXTH FLOOR
GENERAL FIRE PROTECTION

SCALE	1:100	DATE	OCT 2020
DESIGNED	R.B	DATE	OCT 2020
DRAWN	RH	DATE	OCT 2020
CHECKED	R.B	DATE	OCT 2020
APPROVED	R.B	DATE	OCT 2020
PROJECT & DRAWING No.		72/M/306	
REVISION			